PLAN

SCALE 1-1/2" = 1'-0"

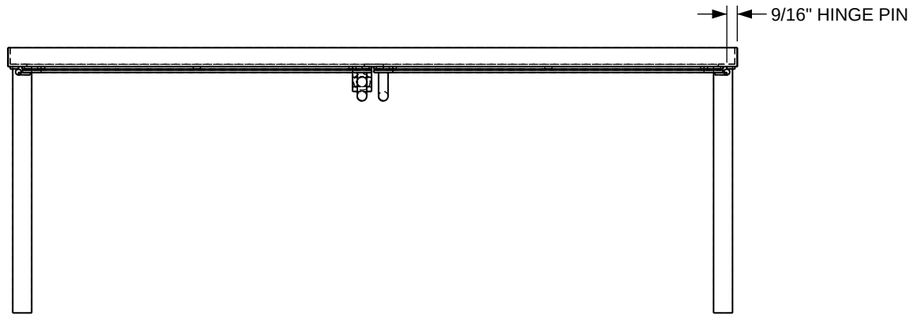

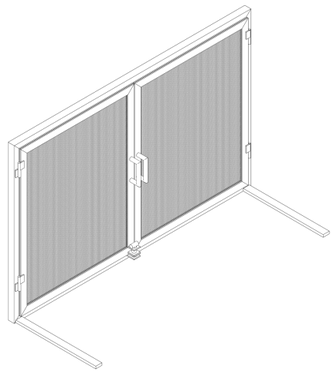

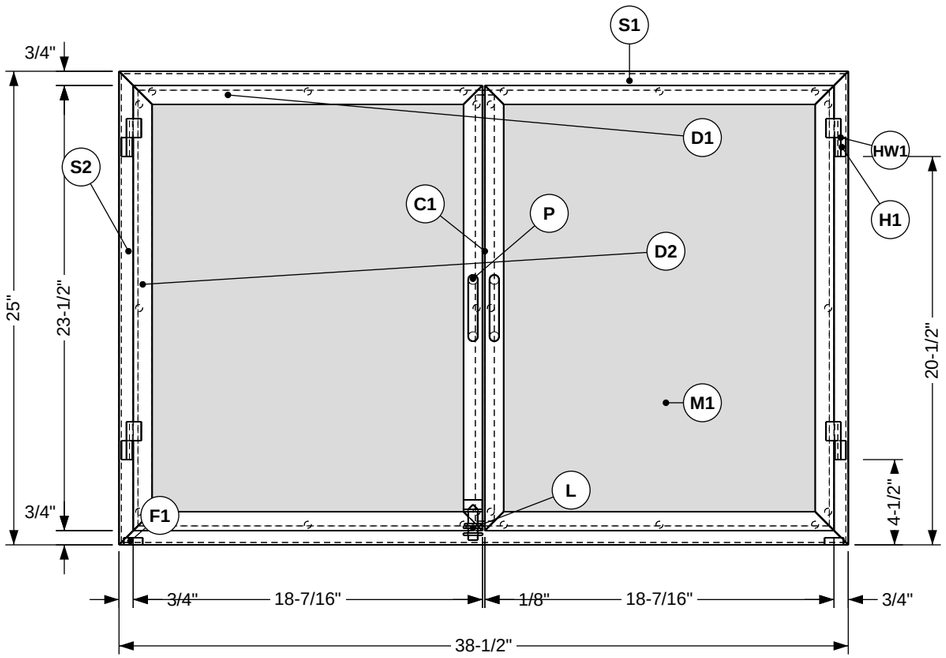

FRONT ELEVATION

SCALE 1-1/2" = 1'-0" (MESH SHOWN SHADED)

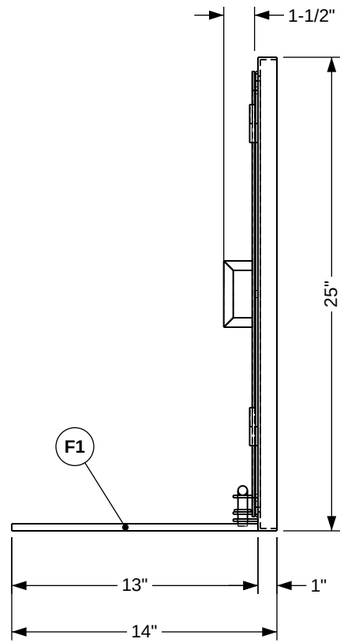

RIGHT SIDE

SCALE 1-1/2" = 1'-0"

BILL OF MATERIAL - 1 SCREEN

MK	QTY	DESCRIPTION	STOCK	LENGTH / SIZE
S1	2	FRAME TOP/BTM	L1x1x1/8	38-1/2" LP 45/45
S2	2	FRAME SIDE	L1x1x1/8	25" LP 45/45
F1	2	FOOT	PL3/8 x 1	13" PLASMA
D1	4	DOOR TOP/BTM	FB1x1/8	18-7/16" LP 45/45
D2	4	DOOR SIDE	FB1x1/8	23-1/2" LP 45/45
R1	4	RETAINER TOP/BTM	PL1/8 x 1	18-7/16" LP PLASMA
R2	4	RETAINER SIDE	PL1/8 x 1	23-1/2" LP PLASMA
C1	1	CENTER STOP	FB1x1/8	22-1/2" SQ
P1	4	PULL LEG	RD1/2	1-1/2" LP SQ/45
P2	2	PULL GRIP	RD1/2	3-1/2" LP 45/45
L1	2	LATCH GUIDE	PL1/8	1 x 1 PLASMA
L2	1	LATCH RECEIVER	PL1/8	1 x 1-5/16" PLASMA
L3	1	LATCH PIN	RD1/2	1-5/8" SQ, BUTT TO L4
L4	1	T-HANDLE	RD1/2	1" SQ, CENTER ON L3
L5	1	PIN STOP (ROUND)	PL1/8	7/8" OD PLASMA
H1	8	HINGE TAB	FB1x1/8	HOLD
M1	2	MESH	8 MESH .028 PLAIN STL	17-1/16" x 22-1/8"
HW1	4	BULLET HINGE 2"	NE HINGE	SWH200FP1 (BUY)

NOTES

1. LP = LONG POINT. ALL 45s IN PLANE OF FRAME.
2. FRAME (S): FACE LEG TOWARD ROOM, RETURN LEG ON OUTSIDE EDGE.
3. DOOR STACK, ROOM SIDE OUT: D / M1 / R.
4. MESH IN BEFORE PAINT. FINISH: HIGH-HEAT (HIGH-TEMP) BLACK.
5. PLASMA (DXF FOLDER): FP-FEET-1X13-QTY2, FP-LATCH-PARTS-PL0125, FP-RETAINER-STRIPS-PL0125.
6. P (P1+P2): 1 PER DOOR, C/L OF MEETING BAR, LEGS @ 11" & 14" ABOVE BTM OF FRAME. DET 2/2. L: DET 3/2. C1: DET 4/2.
7. DOORS SWING OUT TOWARD ROOM. HW1 BARRELS 2" LONG, BTM @ HEIGHTS SHOWN.
8. HW1/H1 SHOWN SCHEMATIC UNTIL HINGE HOLD IS RELEASED.

WELDS (MIG)

W1. S, D, R MITERS: FULL WELD BACK SIDE, GRIND ROOM FACE FLUSH.
W2. F1 TO S1: 1/8 FILLET, 3 SIDES.
W3. P TO D, L1 TO D, L2 TO S1, L4 + L5 TO L3: 1/8 FILLET ALL AROUND.
W4. C1 TO R: 1/8 FILLET x 1" STITCH @ 4" C/C, BOTH EDGES.
W5. R TO D: FILL 3/8 PLUG HOLES IN R FROM BACK (DET 6/2). NO WELD ON M1.

HOLD: H1 HINGE TAB SIZE + HINGE AXIS - FIT TO HW1.

ISSUED FOR FABRICATION | THIRD-ANGLE PROJECTION

TCB METALWORKS

PROJECT: TWO-DOOR FIREPLACE SCREEN	DWG NO / REV: TCB-FP-01 R9	
DRAWING TITLE: GENERAL ARRANGEMENT	SHEET: 1 / 6	DATE: 2026-11-23
JOB NO:	DRAWN:	SCALE / UNITS: 1-1/2" = 1'-0" / INCHES

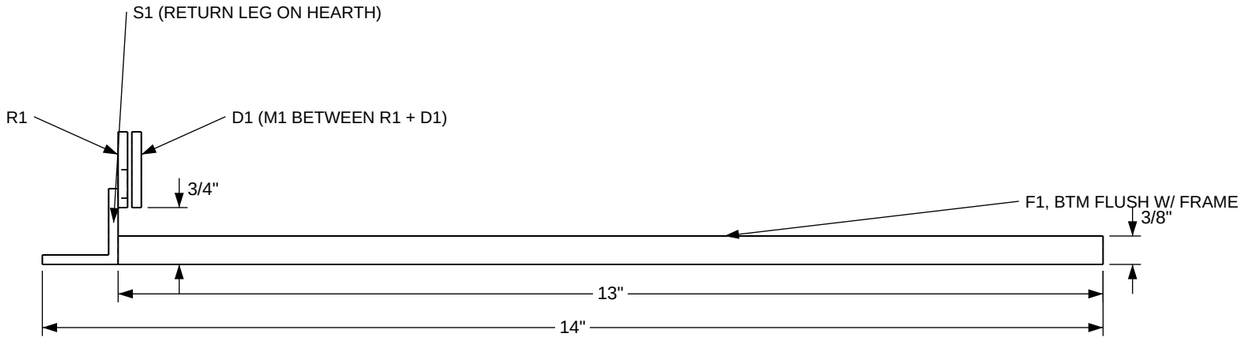

DETAIL 1 - FOOT + DOOR STACK (SIDE)

SCALE 1:2

F1 BUTTS FRONT OF S1, 1/4" IN FROM OUTSIDE EDGE.

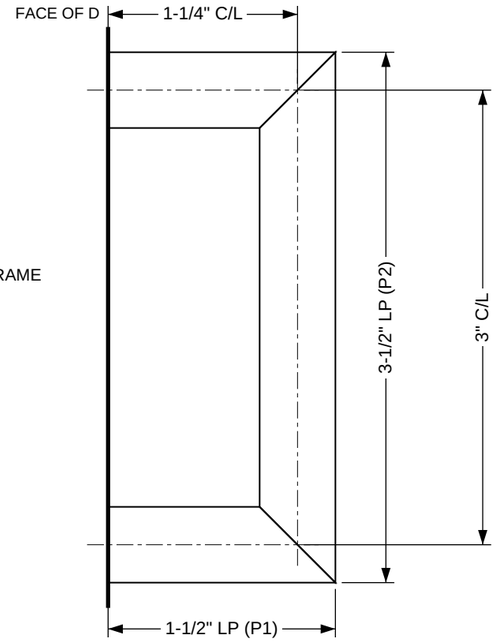

DETAIL 2 - PULL (P1 + P2)

SCALE 1:1 2 REQ

P1: SQ AT D, 45 AT GRIP. P2: 45/45.

WELD MITERS FULL, GRIND SMOOTH.

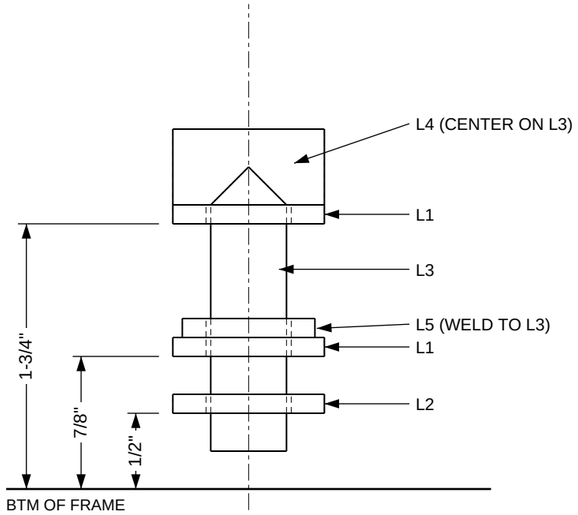

DETAIL 3 - LATCH (FRONT)

SCALE 1:1

HEIGHTS TO BTM OF PART. PIN C/L 1/2" FROM MEETING EDGE.

L2 ON FRONT OF S1, L1 ON FRONT OF D. LIFT 5/8".

L4 PARALLEL TO DOOR FACE. FIT W/ DOORS HUNG + SHUT.

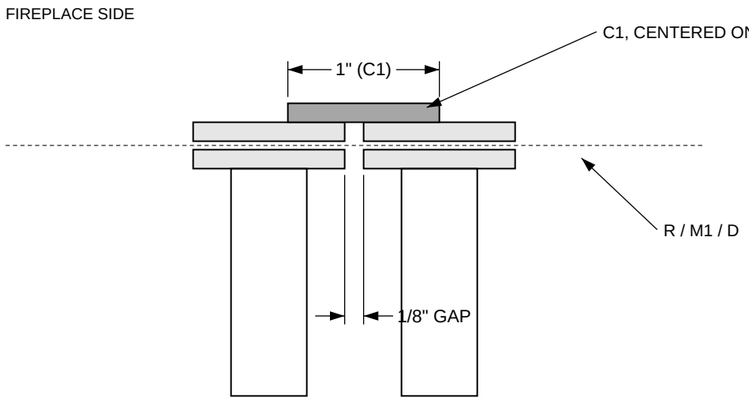

DETAIL 4 - MEETING EDGE (PLAN, ABOVE PULL)

SCALE 1:1

C1 RUNS 1/2" SHORT OF DOOR TOP + BTM. WELD TO R OF DOOR WITHOUT LATCH.

L1 (2 REQ)

9/16" DIA

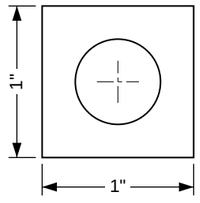

L2 (1 REQ)

9/16" DIA, 1/2" FROM END (FREE END)

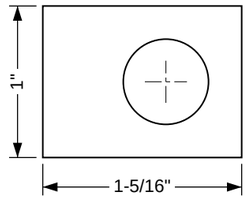

L5 (1 REQ)

9/16" DIA - WELD TO L3

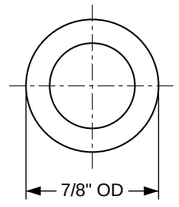

DETAIL 5 - PLASMA PARTS, PL1/8

SCALE 1:1 DXF\FP-LATCH-PARTS-PL0125

DETAIL 6 - R1/R2 PLUG HOLES (PL1/8)

SCALE 1:8. HOLE C/L 5/16" FROM OUTER (LONG) EDGE. 4 OF EACH.

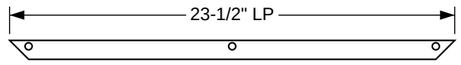

R2: 3 HOLES 3/8 EQ SP, 1st/LAST 1" FROM LP

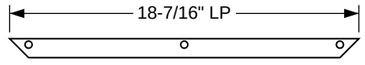

R1: 3 HOLES 3/8 EQ SP, 1st/LAST 1" FROM LP

DXF: FP-RETAINER-STRIPS-PL0125 (ALL 8, NESTED).

ISSUED FOR FABRICATION | THIRD-ANGLE PROJECTION

TCB METALWORKS

PROJECT	DWG NO / REV	
TWO-DOOR FIREPLACE SCREEN	TCB-FP-01 R9	
DRAWING TITLE	SHEET	DATE
DETAILS	2 / 6	2026-11-23
JOB NO / DRAWN	SCALE / UNITS	
	AS SHOWN / INCHES	

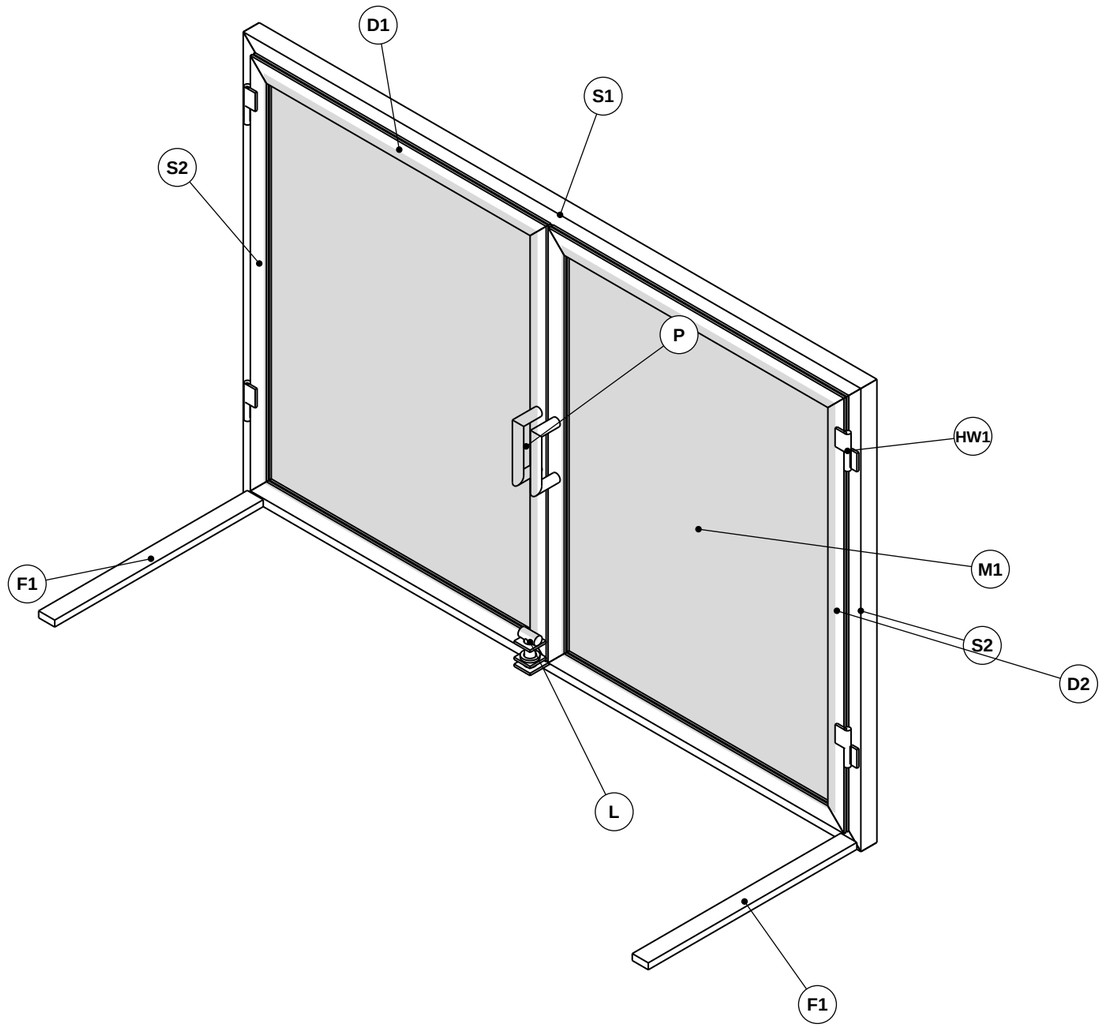

ISOMETRIC - ASSEMBLED, DOORS SHUT

NTS. VIEWED FROM ROOM SIDE, FRONT-RIGHT. MESH SHOWN SHADED.

ISSUED FOR FABRICATION | THIRD-ANGLE PROJECTION

TCB METALWORKS

PROJECT		DWG NO / REV	
TWO-DOOR FIREPLACE SCREEN		TCB-FP-01 R9	
DRAWING TITLE		SHEET	DATE
ISO - ASSEMBLY		3 / 6	2026-11-23
JOB NO	DRAWN	SCALE / UNITS	
		NTS / INCHES	

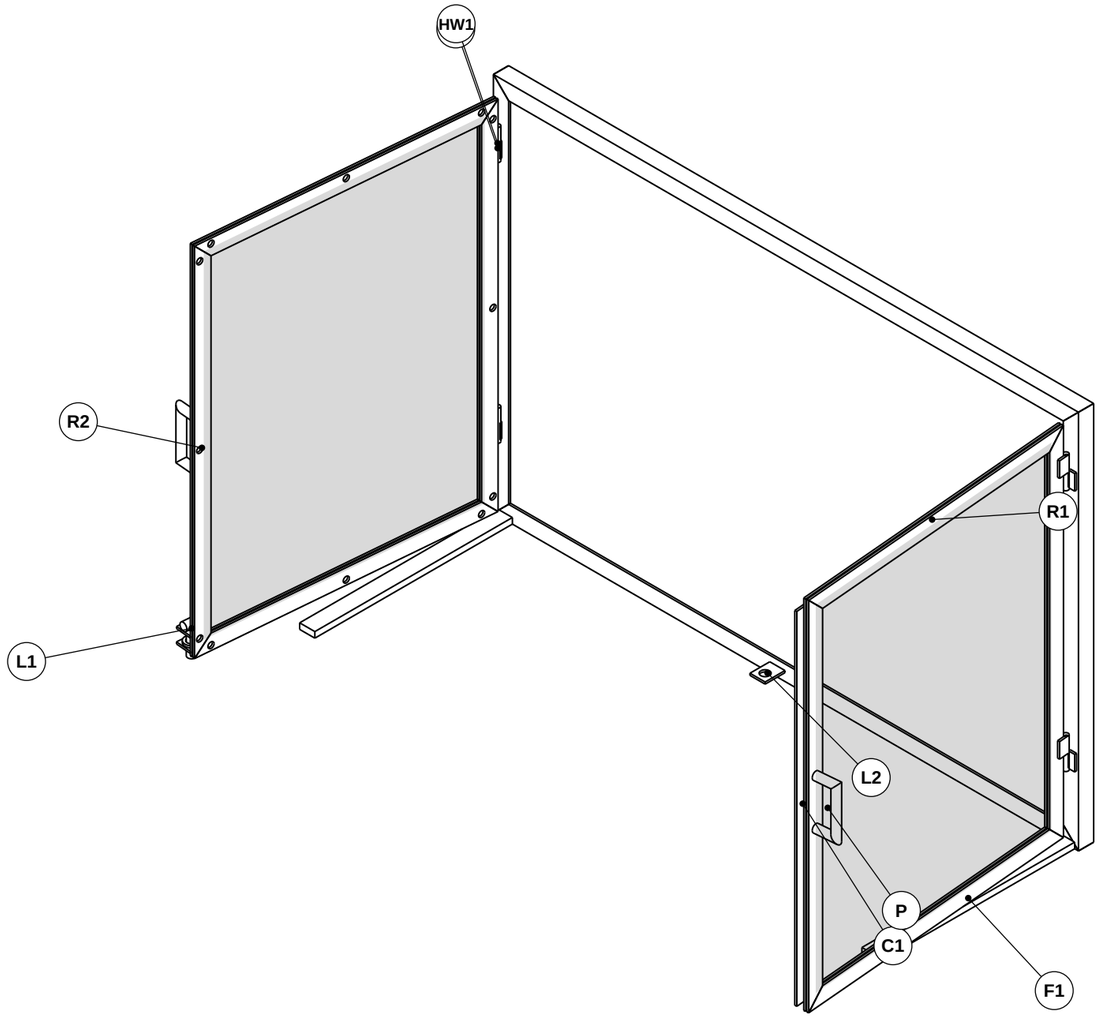

ISOMETRIC - DOORS OPEN 95 DEG

NTS. DOORS HANG ON FRONT OF FRAME AND SWING OUT TOWARD ROOM.
C1 ON BACK OF DOOR WITHOUT LATCH, LAPS THE DOOR WITH LATCH.
OPEN: LIFT L3 5/8 TO CLEAR L2, OPEN DOOR W/ LATCH, THEN THE OTHER.
CLOSE: DOOR W/O LATCH FIRST, THEN DOOR W/ LATCH, DROP PIN.

ISSUED FOR FABRICATION | THIRD-ANGLE PROJECTION

TCB METALWORKS

PROJECT	DWG NO / REV		
TWO-DOOR FIREPLACE SCREEN	TCB-FP-01 R9		
DRAWING TITLE	SHEET	DATE	
ISO - DOORS OPEN	4 / 6	2026-11-23	
JOB NO	DRAWN	SCALE / UNITS	
		NTS / INCHES	

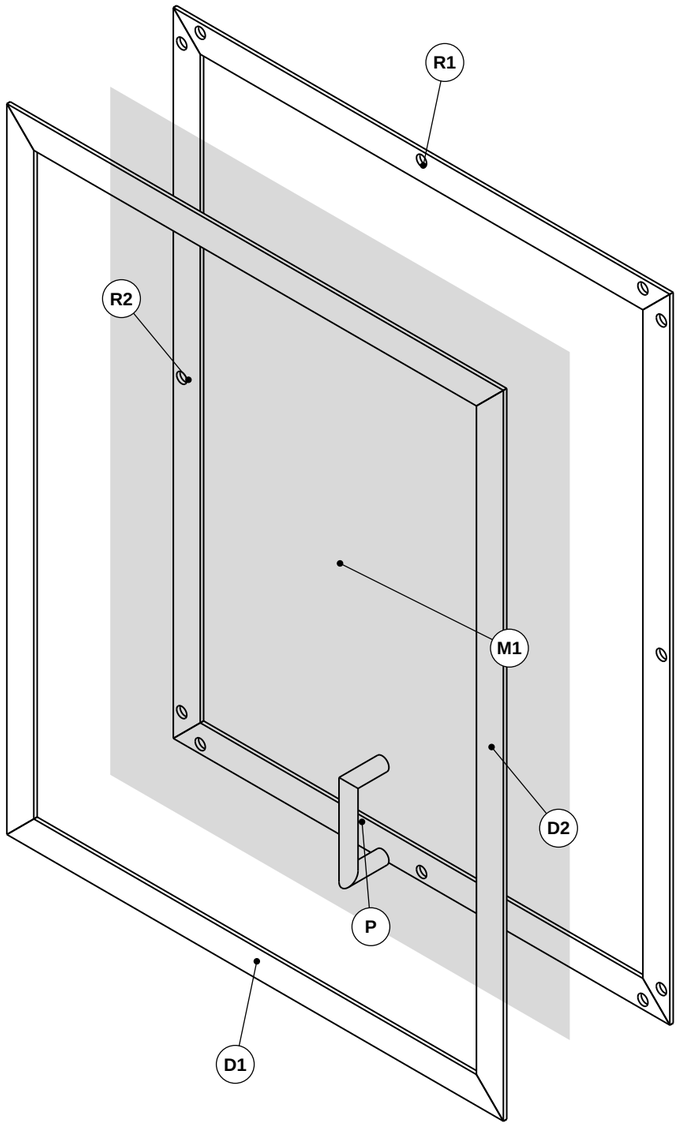

EXPLODED - DOOR STACK (DOOR W/ LATCH SHOWN)

FIREPLACE SIDE TO ROOM: R / M1 / D / P. OTHER DOOR SAME, MIRRORED; C1 ON ITS R.
CLAMP STACK FLAT, PLUG WELD R TO D (W5). LATCH PARTS NOT SHOWN.

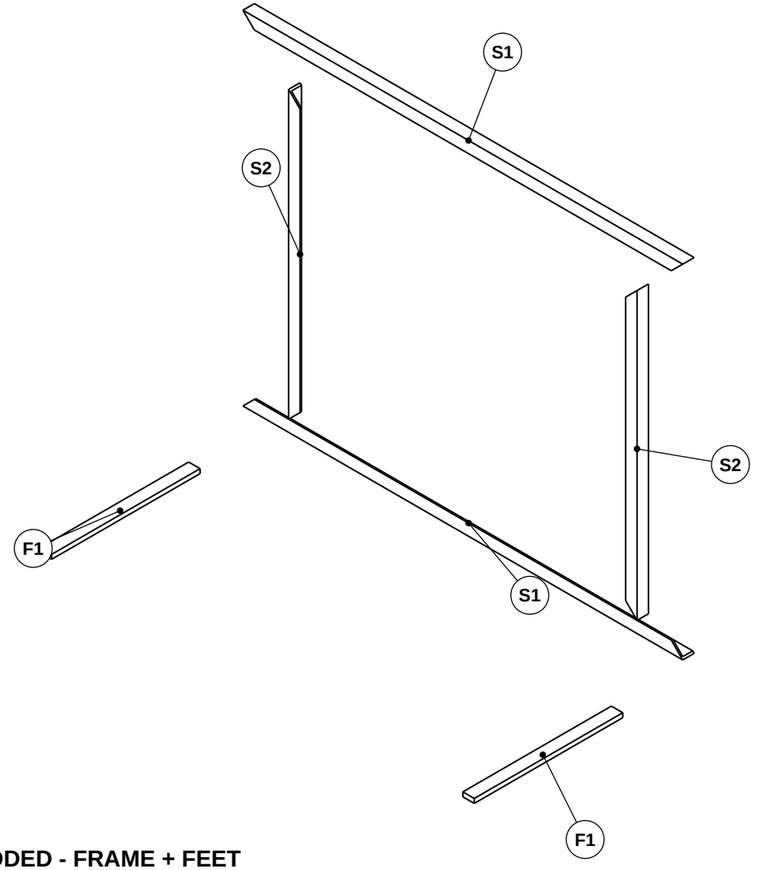

EXPLODED - FRAME + FEET

MITER S1/S2 (W1), THEN F1 TO FRONT OF S1 (W2).

ISSUED FOR FABRICATION | THIRD-ANGLE PROJECTION

TCB METALWORKS

PROJECT		DWG NO / REV	
TWO-DOOR FIREPLACE SCREEN		TCB-FP-01 R9	
DRAWING TITLE		SHEET	DATE
ISO - EXPLODED		5 / 6	2026-11-23
JOB NO	DRAWN	SCALE / UNITS	
		NTS / INCHES	

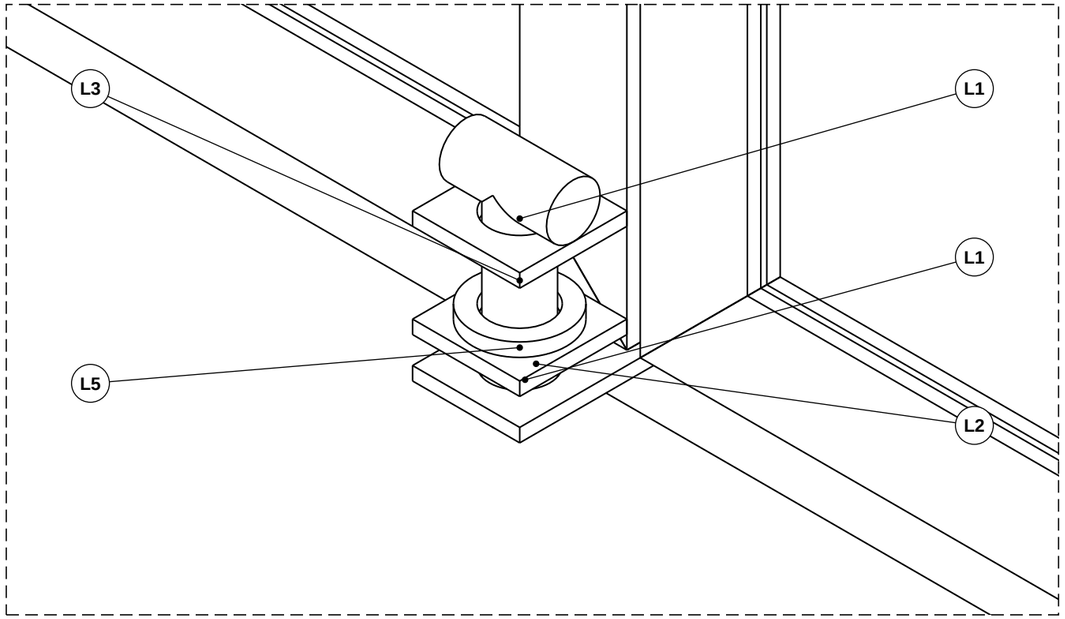

ISO DETAIL A - LATCH (1:1)

L3/L4/L5 WELDED AS ONE PIN. PIN DOWN = LOCKED.

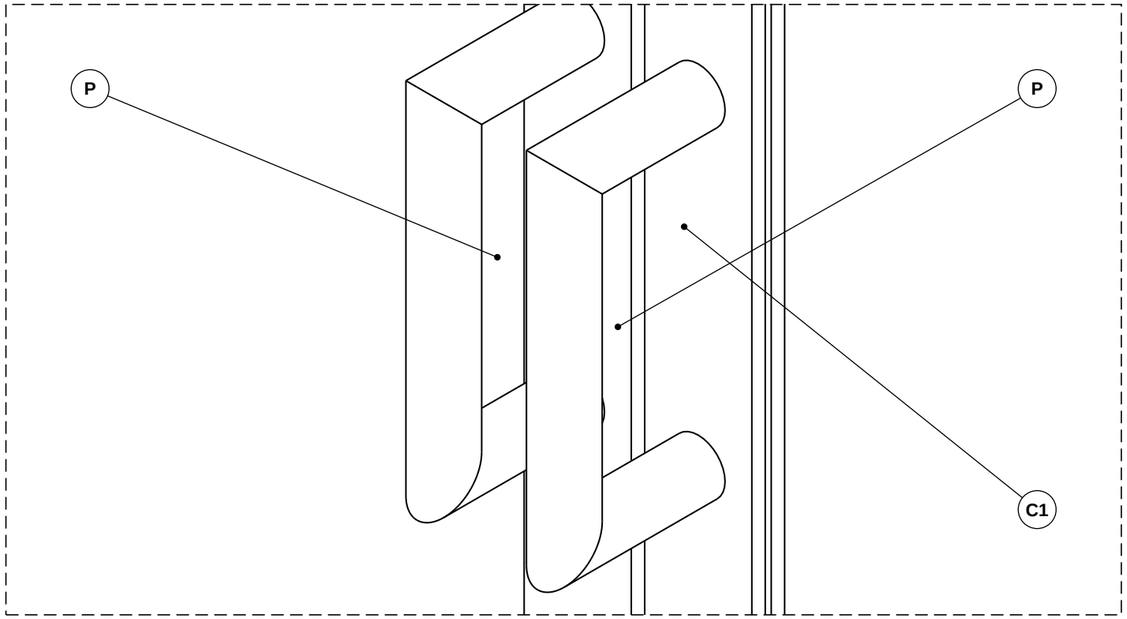

ISO DETAIL B - PULLS + C1 AT MEETING EDGE (1:1)

ONE PULL PER DOOR ON MEETING BAR. C1 BEHIND, SPANS GAP.

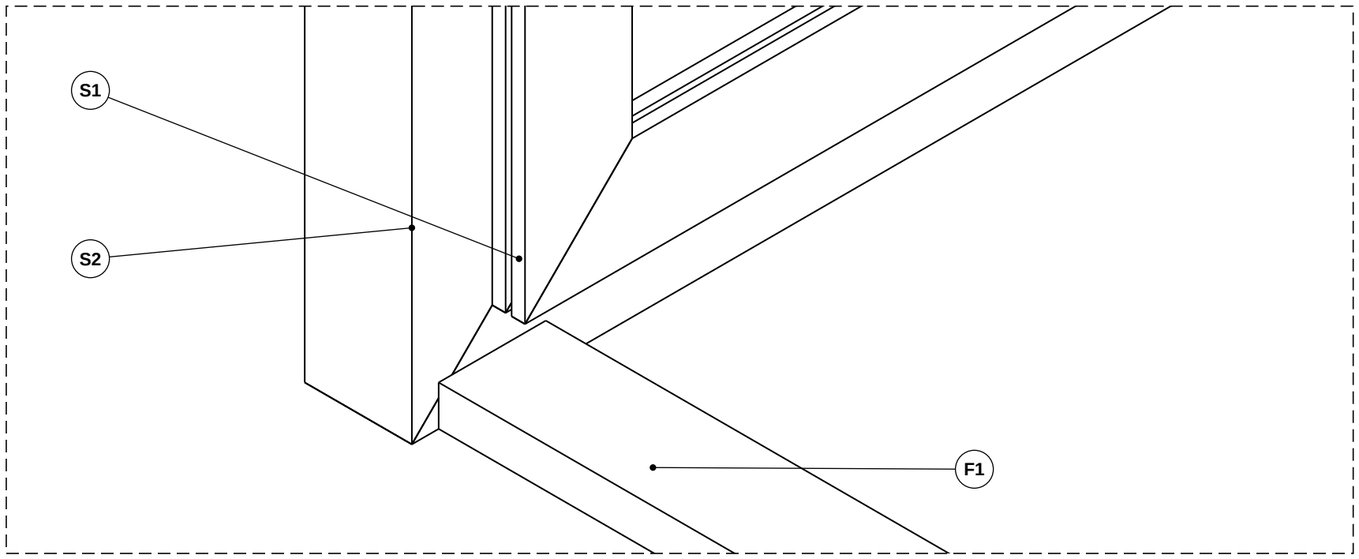

ISO DETAIL C - FOOT CORNER (1:1)

VIEWED FROM FRONT-LEFT. F1 BUTTS FACE OF S1, BTM FLUSH.

ISSUED FOR FABRICATION | THIRD-ANGLE PROJECTION

TCB METALWORKS

PROJECT	DWG NO / REV		
TWO-DOOR FIREPLACE SCREEN	TCB-FP-01 R9		
DRAWING TITLE	SHEET	DATE	
ISO - DETAILS	6 / 6	2026-11-23	
JOB NO	DRAWN	SCALE / UNITS	
		AS SHOWN / INCHES	